第 49 卷第 07 期
2022 年 月

湖南大学学报（自然科学版）
Journal of Hunan University（Natural Sciences）

Vol. 49. No. 07
July 2022

Open Access Article

A REVIEW TO THE STRUCTURAL BEHAVIOR OF REPAIRED REINFORCED CONCRETE BEAMS

Farooq Omar Hamid
Civil Engineering Department, Mustansiriyah University, Baghdad, Iraq) Master student.

Ali Sabah Al Amli
Civil Engineering Department, Mustansiriyah University, Baghdad, Iraq) PHD.

Abstract

Due to the high cost and extended time required for the reconstruction of damaged buildings, it has become necessary to think about techniques for the rehabilitation of the building's damaged structural members. Concrete structures are frequently exposed to damage as a result of a variety of factors, including environment, design, and other factors. This dictated that the research authors should cover the possible techniques that can be used for doing the role of repair within their research programs, so, the starting point for any research within this context is to build a sophisticated background about the included techniques. This is very important for sufficient developing and to pick novelty.

This paper is presented to view the state of art regarding the paste experience about the repaired reinforced concrete beams. Such review is presented in term of chronological arrangement to the recent contributions by viewing its results concerning structural behavior.

Keywords (in English): Reinforced Concrete; Repairing, Recent contributions, Rehabilitation and Structural Behavior..

1.Introduction

After a building's structure has completely degraded, rehabilitation entails improving its functions in order to increase its capacity. The term "retrofitting" refers to the strengthening of a building structure after or before it has deteriorated structurally.

Recently, significant advances represented by research programs have provided suitable effort techniques / materials to get any improvement. However, major upgrade initiatives in the field of structure repair are included in such development methods.

However, correct technique selection is dependent on the underlying circumstances, and its failures are one of the most critical aspects in the total rehabilitation process. Many practitioners argue that rehabilitation is still a relatively new and demanding field for them. Due to the lack of similarity between any two structures, this process becomes more challenging. As a result, selecting rehabilitation treatments is a difficult task influenced by economic, technological, and social factors [1].

2. Significance of The Study

Received: June,13, 2022 / Revised: July ,21, 2022 / Accepted: 19,July, 2022 / Published: 2 , August , 2022

About the authors：Farooq Omar Hamid

Email:

Collecting the reliable data about the structural behavior of repaired reinforced concrete beams is very crucial issue for any researchers for understanding the relevancy with the applicability of the used repairing techniques to these structural members and to know the state of are to build reasonable starting point for his research program. In this way, the current paper presents a short review about the structural behavior of these beams.

3. Recent Contributions

The following are the most common research contributions that survived in the literature regarding the repaired RC beams:

Diab et al., (1998) [2] Investigated the approach of sprayed concrete to rehabilitate the RC beams. The proposed approach comprises loading series of beams till failure, then after, surrounding the top and section sides by sprayed concrete in addition to two additional longitudinal bars at beams top layers. Finally, the beams were tested to compare the role of rehabilitation. The initial cross section is a rectangular cross section of 33 cm by 13 cm while after rehabilitation, the section will be enlarged to 40 cm by 20 cm as shown in Figure (1). The results of that study showed that this rehabilitation technique can recover more than the original load carrying capacity as shown in Figure (1 a) and Figure (1 b).

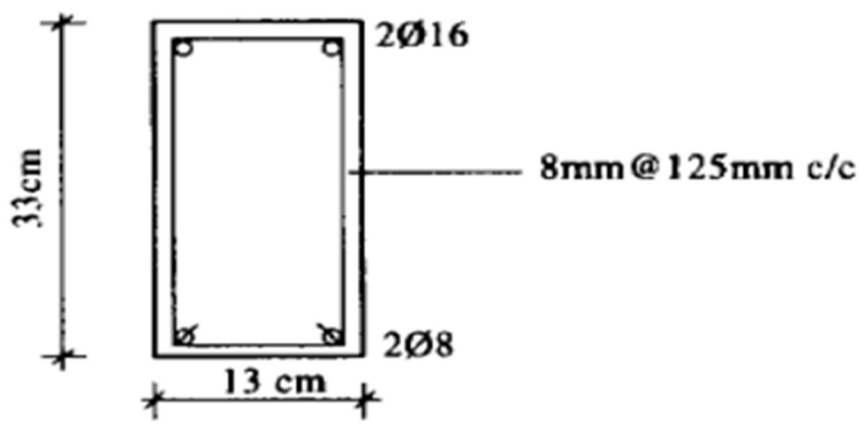

(a)

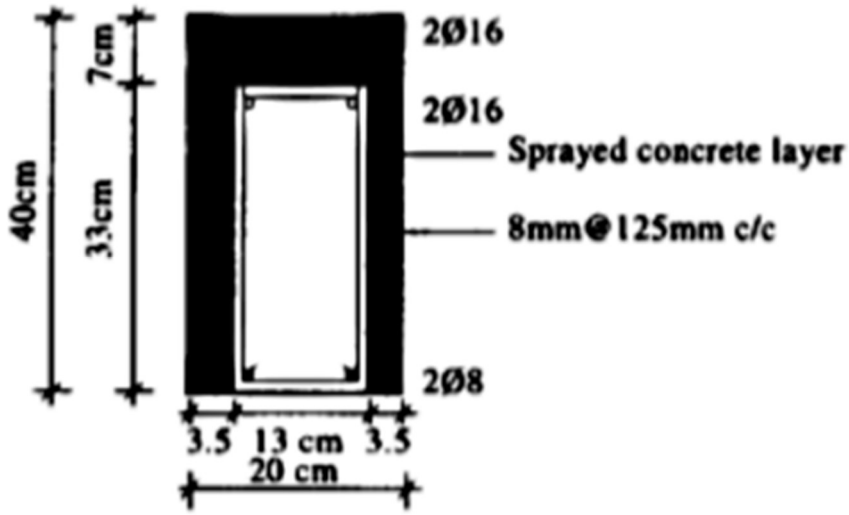

(b)

Figure (1) Beam cross section of Diab et al., (1998): (a) Before rehabilitation. (b) After rehabilitation.

Ahmad et al., (2013) [3] Conducted an experimental program for inspecting the technique of epoxy resins injection for repairing the pre cracked RC beams and how much the strength and the stiffness can be recovered. The proposed procedure established the cracking limit width to 1 mm. It is concluded that the proposed technique can recover the original load carrying capacity as well as the consequent stiffness.

It was also deduced during such contribution that the proposed technique is effective in flexural cracks more than the shear cracks. Figure (2) shows load deflection comparison between control beam response and repaired beam response.

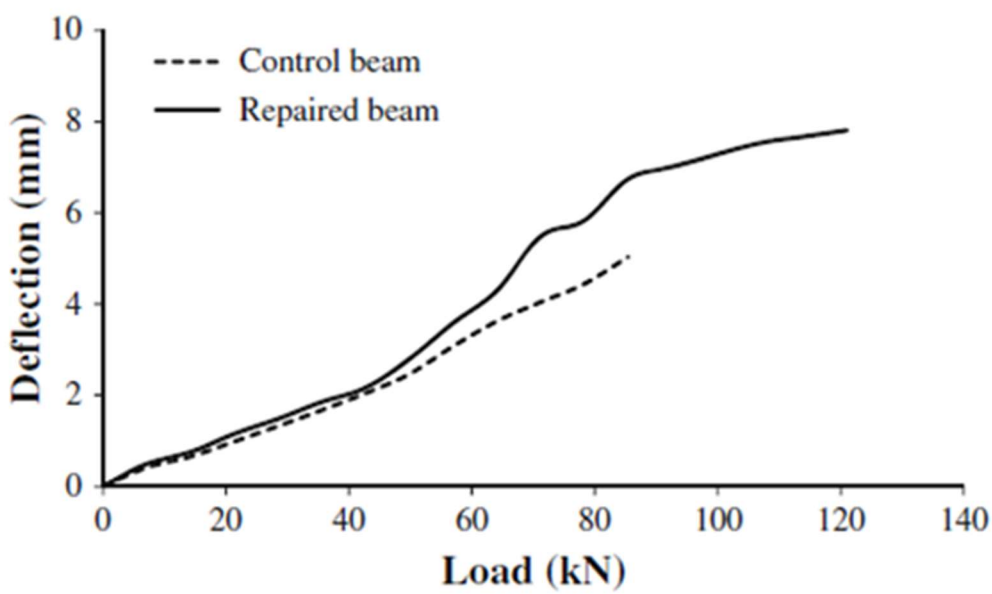

Figure (2-10): Load – deflection response of Ahmad etal., (2013)

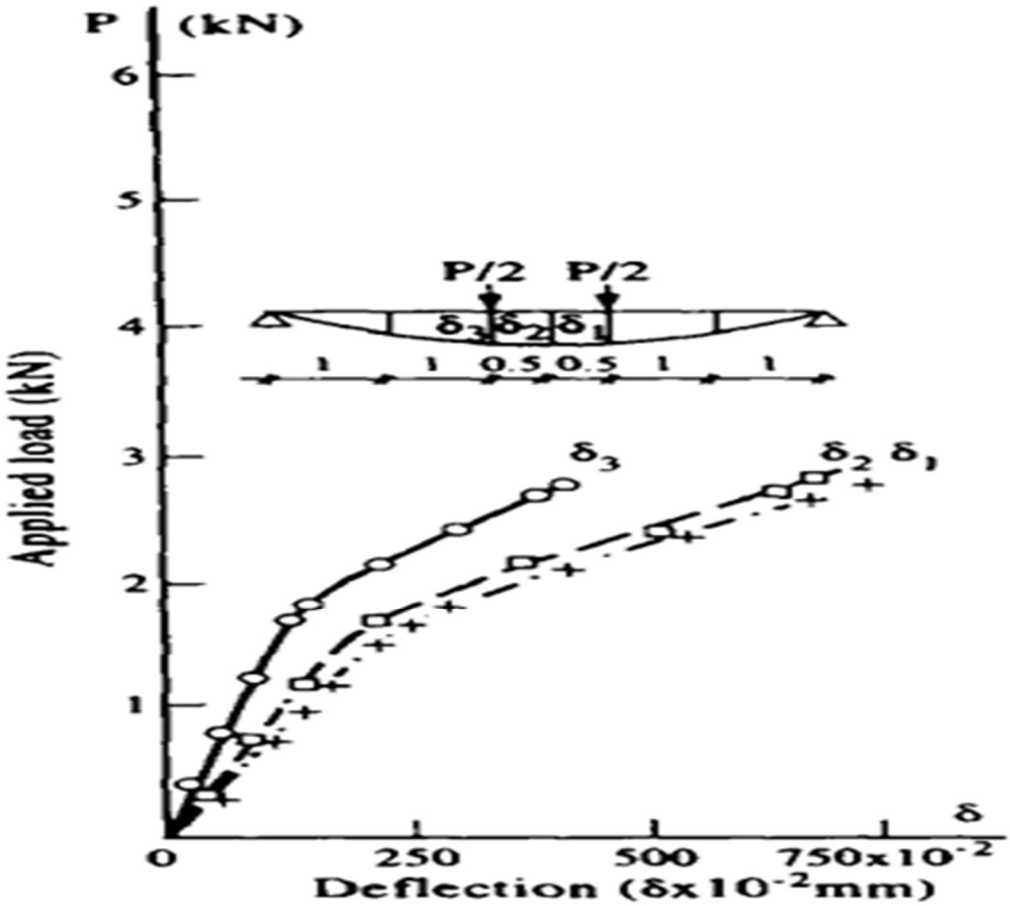
P (kN)
6
5
4
3
2
1
0
Applied load (kN)
P/2 P/2
δ3 δ2 δ1
1 1 0.5 0.5 1 1
δ3
δ2 δ1
δ
250
500
750x10-2
Deflection (δx10-2mm)

(a)

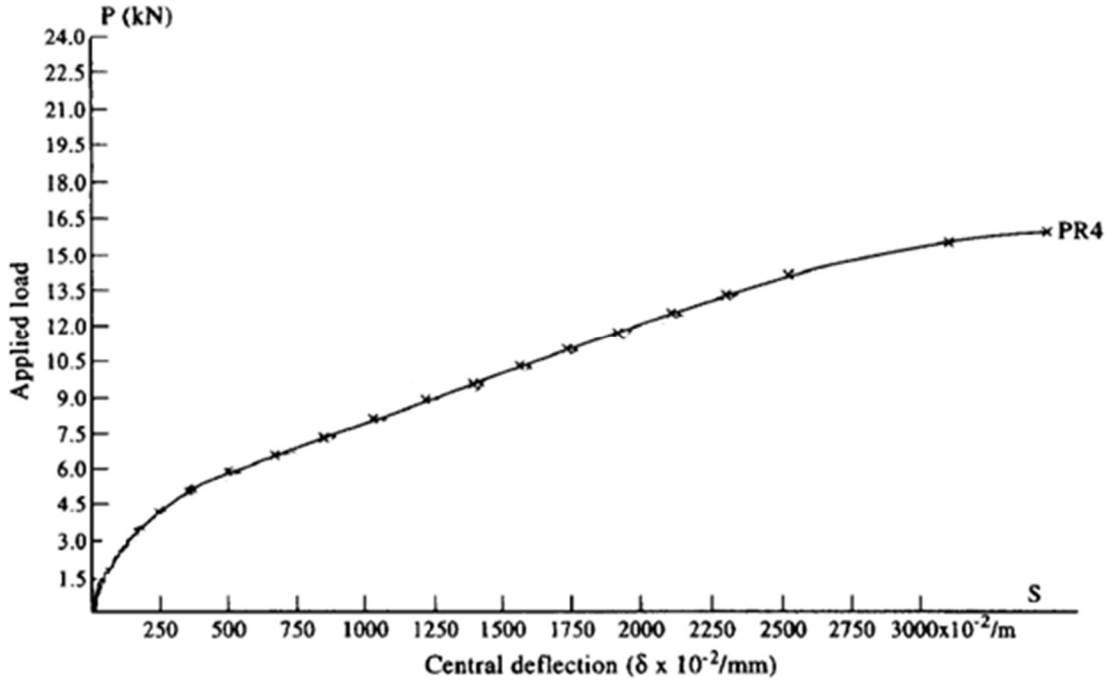

(b)

Figure (2) Load deflection response of Diab et al., (1998): (a) Before rehabilitation. (b) After rehabilitation.

Hussein et al., (2013) [4] Investigated the effectiveness of using temporary force for supporting the used CFRP epoxy hardening. The basic idea of that research is extrapolated from the fact that the bonded CFRP sheets are usually need a uniform contact surface of concrete to guarantee the good bonding and to compensate tension stresses between CFRP sheets and epoxy in early epoxy curing ages. All the repaired beams was pre failed by shear and tested till failure after rehabilitation. The CFRP sheets were bounded in term of three U - wrapping to confine the intended cracks within the shear cracking zone as shown in Figure (3).

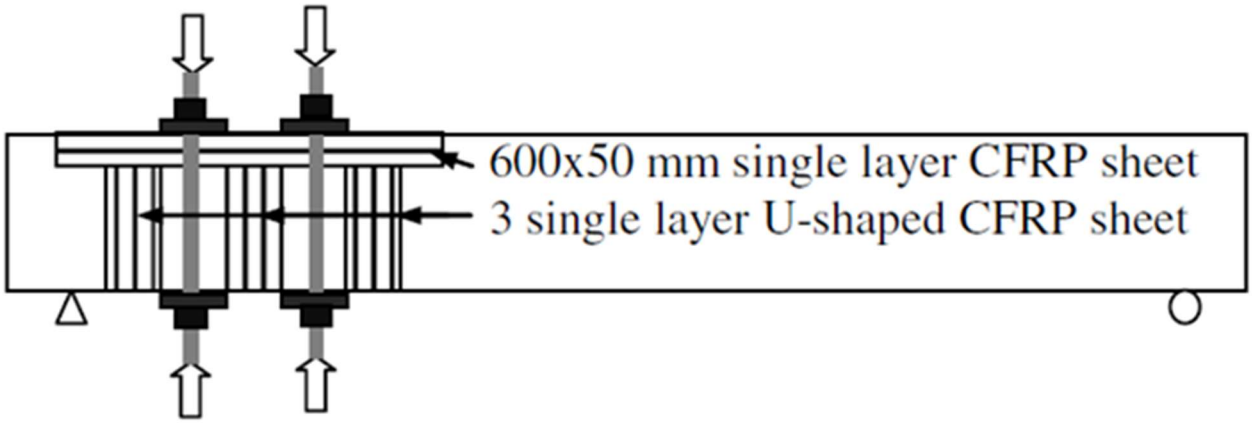

Figure (3): U- wrapping and force application within Hussein etal., (2013)

The results of that study showed that the proposed techniques is effective for RC beams with relatively low cracks which cannot be repaired by epoxy injection.

Shihada and Oida, (2013) [5] Investigated the effectiveness of using Cement-based Repair Material (CRM), Normal Strength Concrete (NSC), Ultra High Performance Concrete (UHPC) and Ultra High Performance Fiber Reinforced Concrete (UHPFRC) for repairing pre-cracked RC shallow beams in term of flexural load carrying capacity.

The results of that study that UHPFRC specimen strength can overcome the original load carrying capacity by 11% as shown in Figure (4). In addition, it is stated during that research that UHPFRC and CRM specimens illustrated cracks less than other proposed beams.

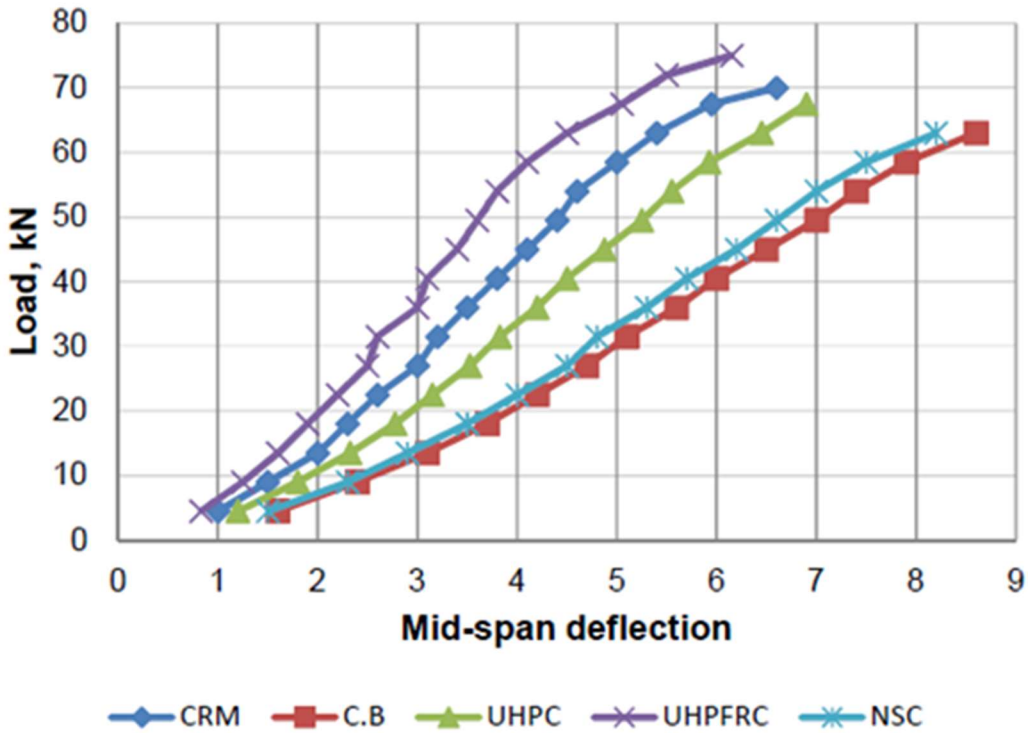

Figure (4) Load deflection response of Shihada and Oida, (2013)

Wang etal., (2013) [6] Conducted an experimental program to investigate the section enlargement, external reinforcement and epoxy resin mortar rehabilitation techniques to RC beams that inherently failed in shear. For section enlargement, the section before rehabilitation were 150mm x 200mm and after enlargement were 250mm x 300mm. The main variable that made was the shear reinforcement spacing. For doing the external reinforcement rehabilitation, two bars of 6mm in diameter were used for top and bottom and the same inherent shear reinforcement spacing was arranged again after rehabilitation as shown in Figure (5).

The results showed that the proposed techniques were effective in recovering the original load carrying capacity. The epoxy resin mortar was able to recover between 70% to 80% from load carrying capacity. In addition, it is recorded that the section enlargement was able to produce 150% of such capacity.

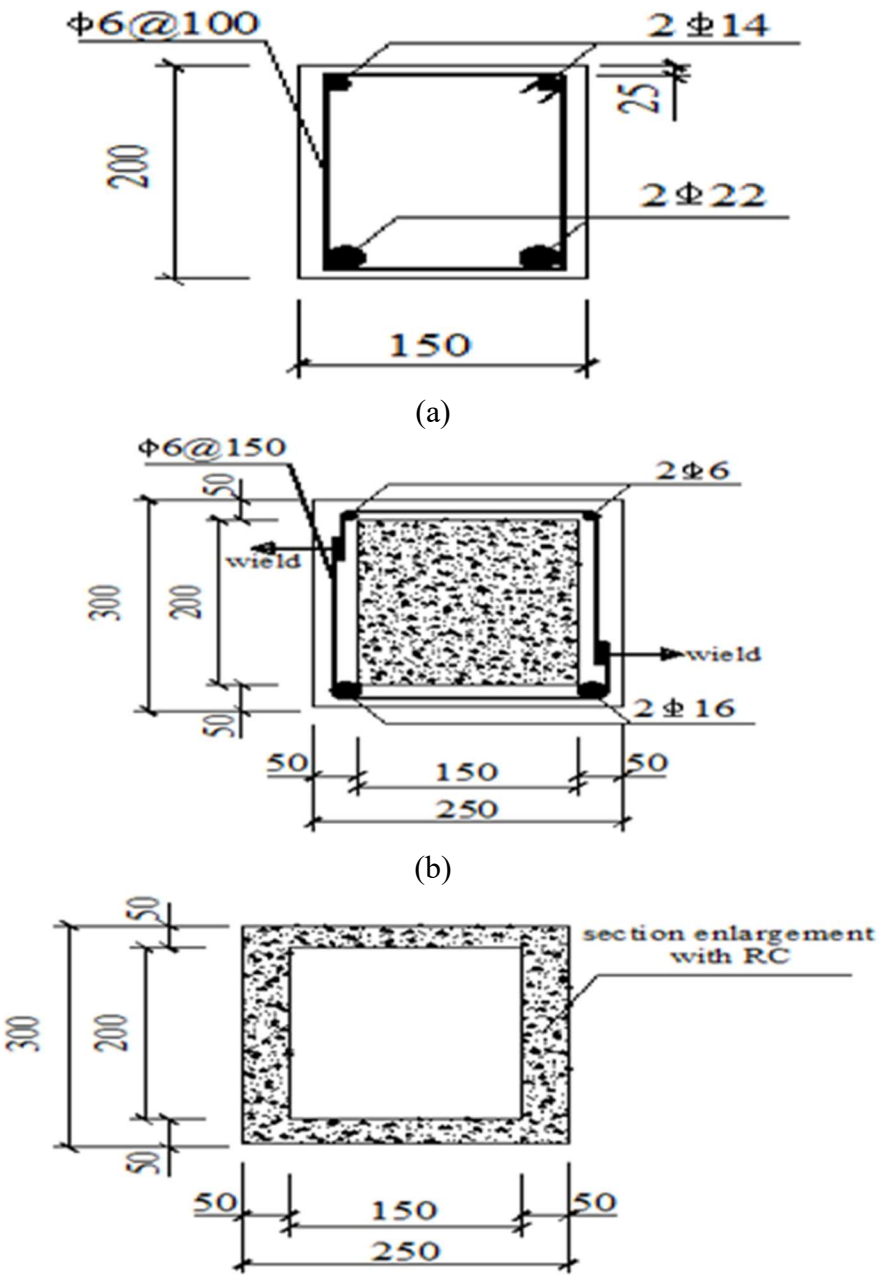

Figure (5): Techniques of Wange etal., (2013): (a) Before rehabilitation. (b) External reinforcement. (c) Section enlargement.

Duarte etal., (2014) [7] Implemented an experimental program to investigate the effect of the presence of pre epoxy injection to the RC beams of T - section repaired by CFRP sheets. The CFRP sheets were taped as strips at the bottom of web. That research contribution included numerical modeling by Finite Element Method (FEM).

The results showed that the presence of pre epoxy injection is effective for enhancing stiffness. In addition, there is a relatively slight improvement with respect to ultimate load capacity. In addition, the numerical modeling results showed a good agreement with experimental results as shown in Figure (6).

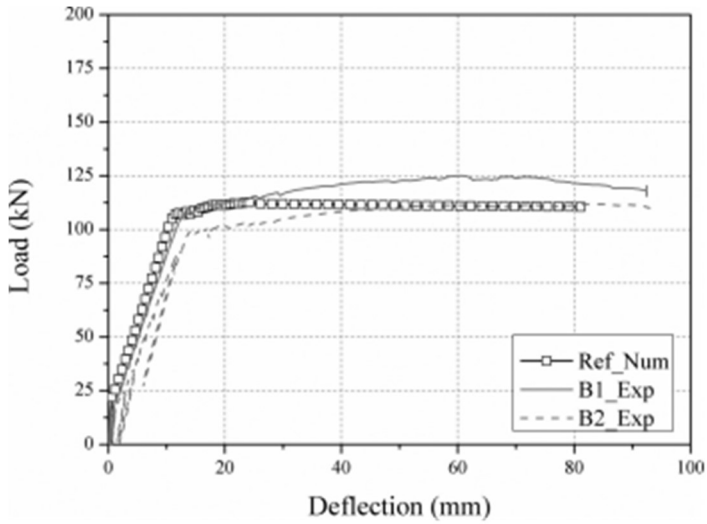

Figure (7): Experimental versus numerical results of Duarte etal., (2014)

Fayyadh and Abdul-Razak, (2014) [8] Implemented a research program to investigate the degree of severity effect for RC repairing by the use of bottom strips of CFRP. That program included conducting experimental work as well as numerical modeling using FEM. For the entire research work, the structural behavior was characterized by the load – deflection, load – strain for steel reinforcement and CFRP as well as the failure modes before and after rehabilitation.

It is stated during that study that increasing the damage servility level increases the consequent deflection and steel strain levels during the post repairing stage. Furthermore, the followed CFRP bottom strips method was effective whatever the severity level is.

The numerical modeling of that study showed a good agreement between the experimental and numerical work as shown in Figure (8).

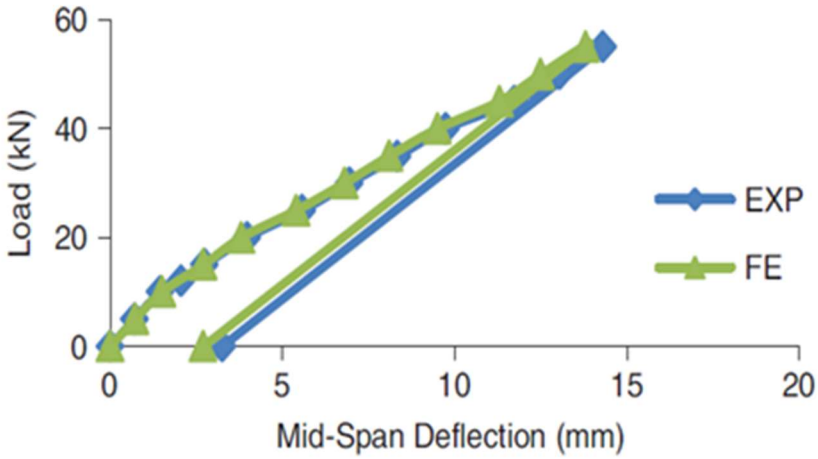

Figure (8): Experimental versus numerical results of Fayyadh and Abdul-Razak, (2014).

Gunarani and Saravanakumar, (2014) [9] Conducted an experimental program for inspecting the effectiveness of epoxy and polymer grouting for repairing the RC beams that failed in flexural. During that research, the specimens structural behavior before and after rehabilitation was represented by load – deflection, moment – curvature and the relevant load cracking propagation.

The results of that research contribution showed that the epoxy and polymer grouting illustrated good degree of recovery to the inherent strength of beam while the ductility of the repaired beam may be more than original. In the same context, the ductility of the polymer repaired specimens is more than the corresponding epoxy specimens.

Furthermore, the cracking pattern of the rehabilitated specimens is the same as the original control beams. Figure (9) shows the experimental load deflection response of that study.

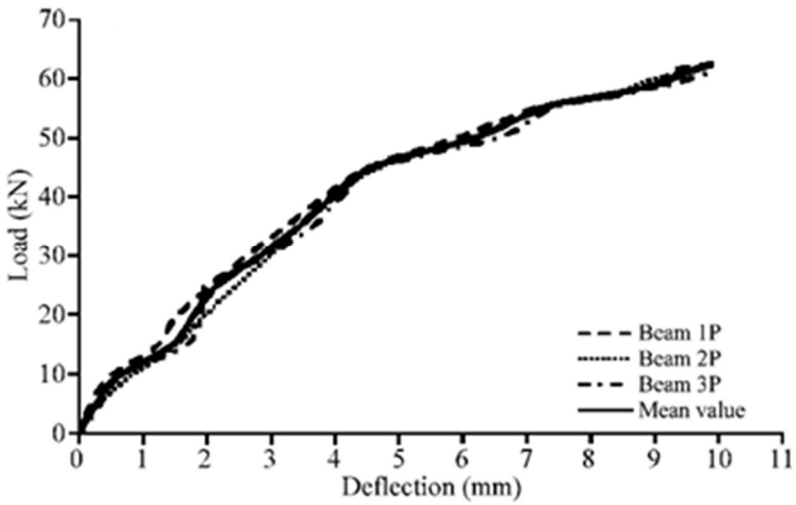

(a)

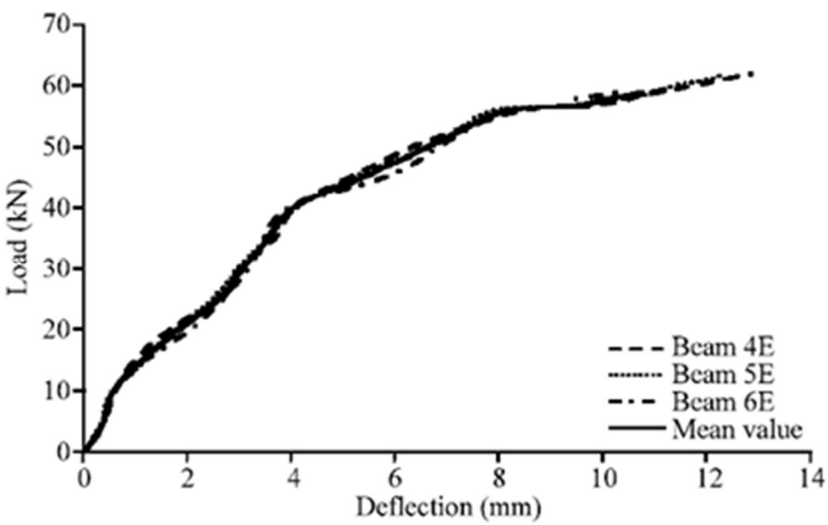

(b)

Figure (9): Experimental results of Gunarani and Saravanakumar, (2014): (a) Polymer grouting. (b) Epoxy grouting.

Morsy et al., (2015) [10] Conducted an experimental program in order to investigate the efficiency of embedded 12mm CFRP rod as Near Surface Mounted (NSM) rehabilitation technique to RC beams. That study compared the role of such type of rehabilitation with the corresponding strengthening technique (without pre – loading).

The methodology of such experimental program included different pre – loading levels before CFRP road embedment (50%, 70% and 70% times load carrying capacity). The study included a specimen comprised CFRP road as stirrups in addition to steel stirrups.

The results showed that the utilization of CFRP rod as a stirrups is a promising technique. For different levels of pre –loading, the concrete cover delamination can be inhibited seriously by the CFRP embedment. Additionally, the preloaded specimens illustrated load carrying capacity more than the reference as shown in Figure (10).

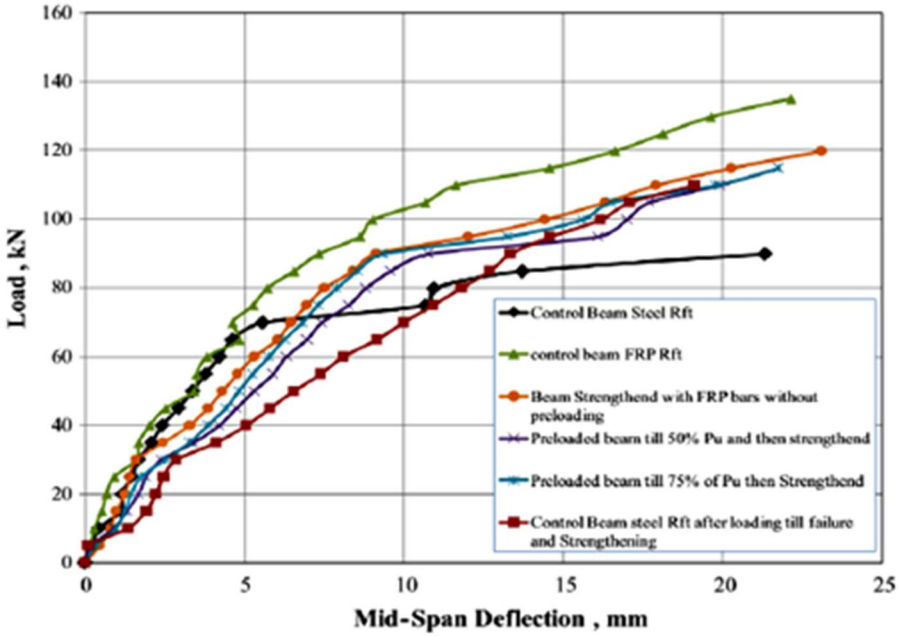

Figure (10): Load deflection response of Morsy etal., (2015) experimental work.

Ahmed etal., (2016) [11] Implemented an experimental work for inspecting the effectiveness of RC beam repairing by CFRP and steel plates. During that work, the beams contain rectangular transverse web opening and the CFRP and steel plates was installed around such openings by two arrangements, rectangular and hexagonal as shown schematically in Figure (11).

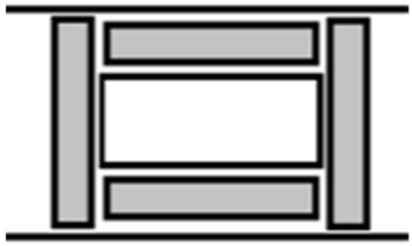

(a)

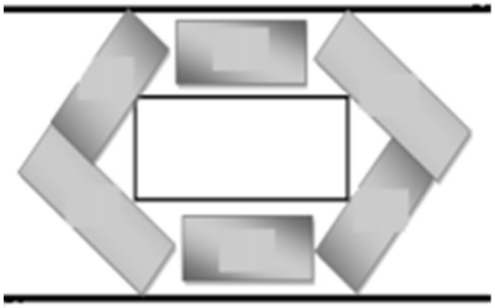

(b)

Figure (11): Configurations of CFRP and steel plates rehabilitation of Ahmed etal., (2016): (a) Rectangular. (b) Hexagonal.

The results of that study showed that the repairing effectiveness (with respect to maximum load carrying capacity) illustrated good levels of effectiveness for both steel plate and CFRP rehabilitation. The degree of effectiveness for CFRP hexagonal was about 25% while such degree can reach 43% in CFRP rectangular. Additionally, the steel plate effectiveness reported 4% in hexagonal and about 30% in rectangular. The load deflection response (at the edge of opening for repaired specimens) within that study is shown in Figure (12).

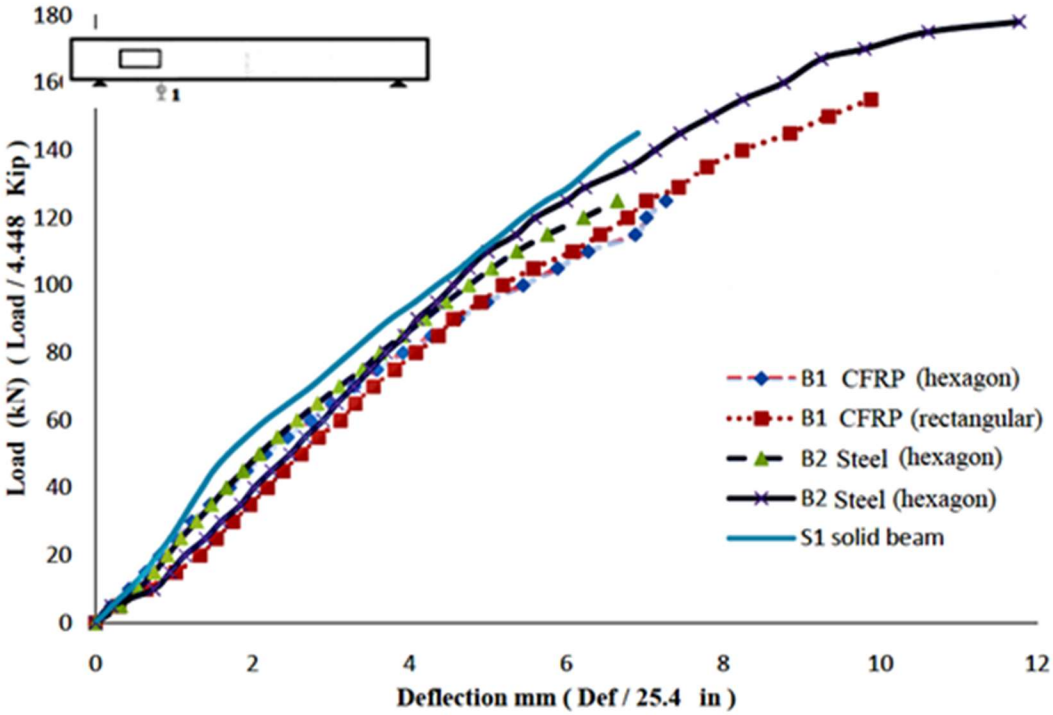

Figure (12): Load deflection response of Ahmed etal., (2016)

Boumaaza etal., (2017) [12] Conducted an experimental program to investigate the rehabilitation role of GFRP patches to RC deep beams. The RC beams was designed to fail in shear. The structural behavior before and after rehabilitation was represented by ultimate load carrying capacity and the

consequent failure modes. The variables included was the degree of pre – loading and the U - wrapping orientation. The wrapping orientation included was +45o/-45o, 30o/60o, 20o/70o and 0/90o as shown in Figure (13).

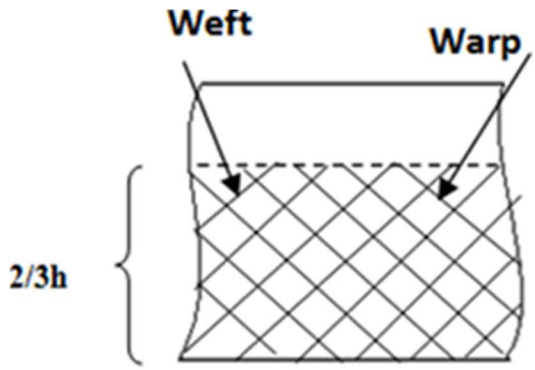

(a)

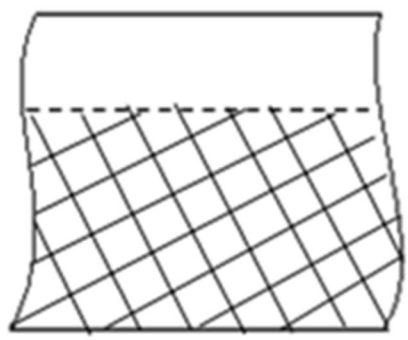

(b)

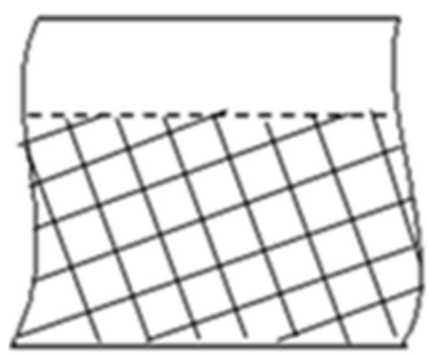

(c)

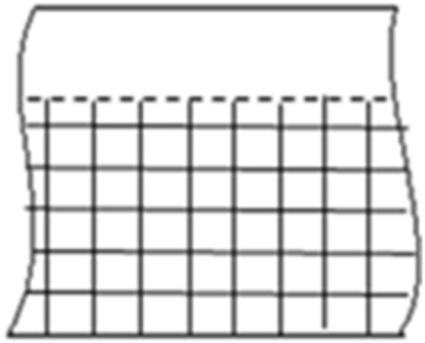

(d)

Figure (13): The wrapping schemes of Boumaaza etal., (2017): (a) +45o/-45o. (b) 30o/60o. (c) 20o/70o. (d) 0/90o.

It is concluded throughout that contribution that the specimens repaired by the proposed technique illustrated ultimate load capacity less than the control by about 13% to 16%. Furthermore, the failure mode of these specimens was modified from shear to “concrete crushing”.

Abdulrahman and Rashid, (2019) [13] Conducted an experimental program to investigate the rehabilitation role of different CFRP arrangements around a central transverse web opening in reactive powder RC beams of T-section. Such research program included the opening location (a fourth, a third and mid of span) as well as the opening shape (circular and rectangular). The repairing techniques that included vertical and horizontal strips, horizontal strips and internal face strips for both circular and rectangular openings as shown in Figure (14).

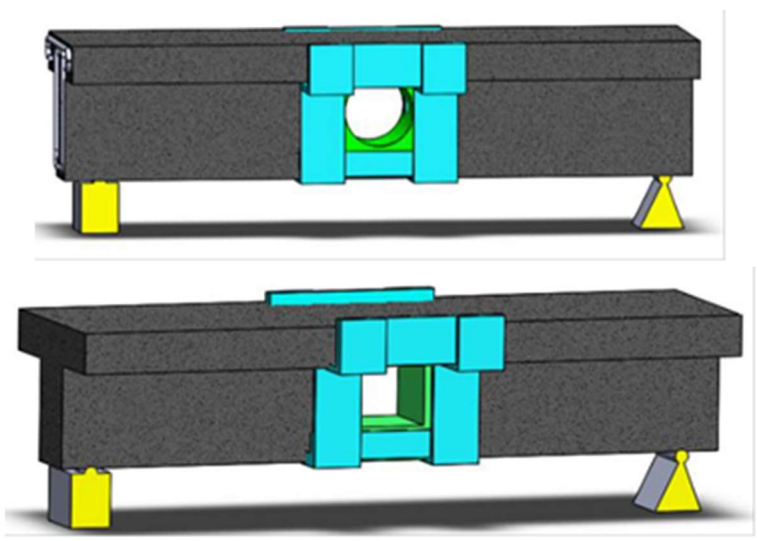

(a)

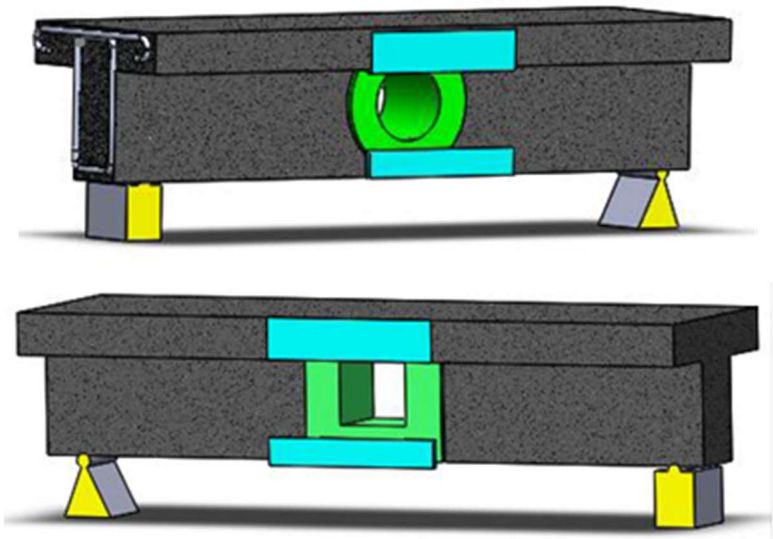

(b)

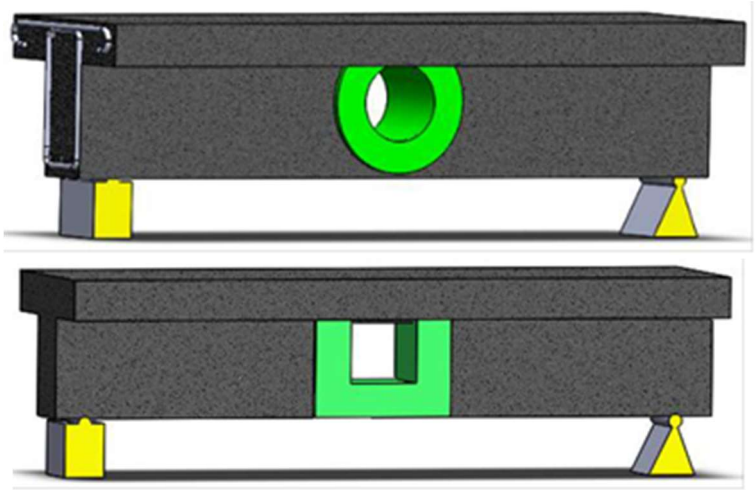

(c)

Figure (14): Repairing schemes of Abdulrahman and Rashid, (2019): (a) Vertical and horizontal strips. (b) Horizontal strips. (c) Internal face strips.

It is reported that the proposed techniques were effective to do the intended role of repairing. For circular shape and all locations, the ultimate load carrying capacity can overcome the original between 2% to 4% while for rectangular, such capacity takes between 2% to 14%.

Chalioris etal., (2019) [14] Conducted an experimental work for inspecting the effectiveness of mortar U - jackets for repairing the RC beams that heavily damaged in shear. The mortar of jacketing includes slight stirrups and longitudinal reinforcing. The beam dimension before rehabilitation was 200mm x 100mm and become 225mm x 150mm after that as shown in Figure (15).

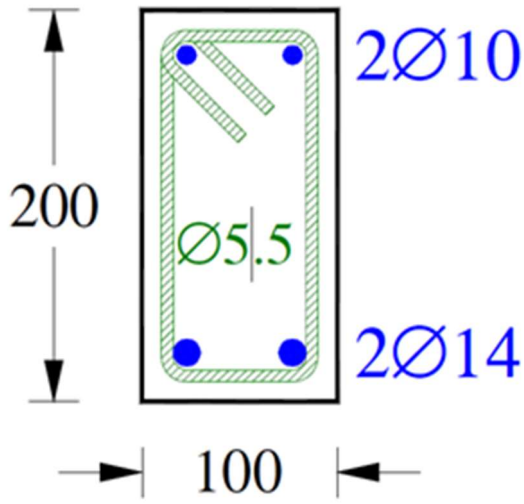

(a)

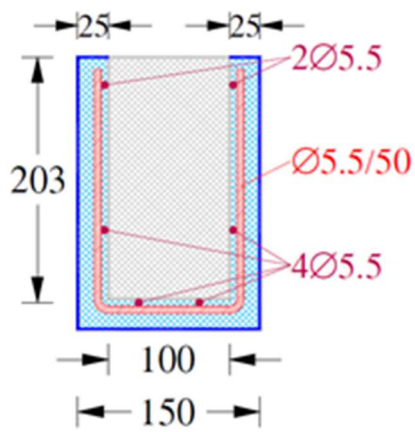

(b)

Figure (15): Sections of Chalioris etal., (2019) specimens: (a) Before rehabilitation. (b) After rehabilitation.

It is reported during that research that the proposed technique is very effective for recovering the original load carrying capacity. In addition, the ultimate deflection of the repaired specimens was increased which means a considerable enhancement was gained with respect to ductility.

Salahaldin etal., (2022) [15] Implemented an experimental program for inspecting the rehabilitation efficiency for hybrid (normal weight concrete + light weight concrete) RC beams that include transverse web openings within shear zone compared with traditional concrete. In addition, that research program included illustrating the difference between beam have one transverse opening to another having two openings but with the same degree of abatement. The rehabilitation technique was the full CFRP sheets wrapping around the openings as shown in Figure (16). while the conventional and hybrid section is shown in Figure (17).

Figure (16): CFRP wrapping of Salahaldin etal., (2022)

(a)

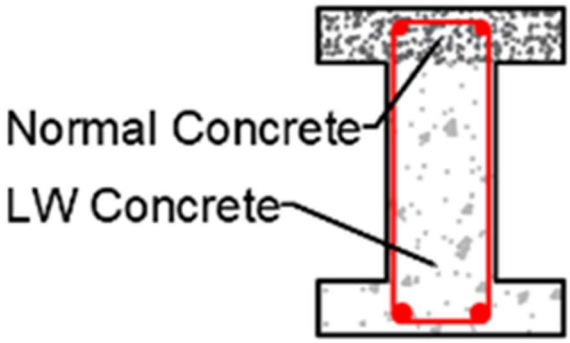

(b)

Figure (17): The normal and hybrid section of Salahaldin etal., (2022)

The results showed that the proposed technique is very effective and can do the desired role of rehabilitation for normal and hybrid sections. In contrast, the results showed that repaired beams with one transverse opening can reach its original primary strength while these of two openings (and having equivalent volume of abatement) can only reach about 84% of such strength.

4. Literature Summary

The literature of repaired reinforced concrete is rich with many contributions that dealt with RC beams rehabilitation taking many possible techniques, however, till now, there are a considerable lack in studies that include other types of concrete like geopolymer beams or even those with irregular sections.

5.Conclusions

The Following conclusions can be drawn from this study:

1) The literature is somewhat rich with many studies that dealt with some repairing techniques like section enlargement, near surface mounted composites, fiber reinforced polymers, steel plates, concrete jacketing, fiber reinforced polymer jacketing and epoxy applications.
2) Both shear and flexural failed reinforced concrete beams are examined throughout the literature by several presented techniques.
3) There are many proposed techniques that proved good degree of recovery especially regarding the load carrying capacity.
4) There is a considerable lack throughout the literature about including damaged reinforced beams that made by un conventional concrete like high strength concrete, reactive powder concrete and geopolymer concrete.
5) During the current survey, it is observed that little recent contributions are now available regarding the repairing of reinforced concrete beams that have irregular sections like Tee and I sections.

6.References

1) Chaimahawan, P., “Seismic Retrofit of Substandard RC Beam-Column Joints by Planar Joint Expansion,” Phd. Thesis, Thammasat University, Nov. 2009, 193 pp.

2) Diab Y.G.. "Strengthening of RC Beams by Using Sprayed Concrete Experimental Approach." Engineering Structures Vol. 20, 1998, pp. 631-643.

3) Ahmad, S., Elahi, A. and Barbhuiya, S. Repair of cracks in simply supported beams using epoxy injection technique. Materials and Structures (2013) 46:1547–1559

4) Hussein, M., Afefy, H. M. E.-D., & Khalil, A.-H. A.-K. (2013). Innovative Repair Technique for RC Beams Predamaged in Shear. Journal of Composites for Construction, 17(6), 04013005. doi:10.1061/(asce)cc.1943-5614.0000404.

5) Shihada, M. and Oida, Y.M. Repair of Pre-Cracked RC Beams Using Several Cementitious Materials. Journal of Scientific Research & Reports 2(2): 655-664, 2013; Article no. JSRR.

6) Wang, Y., Yang, S., Han, M. and Xun, Y. Experimental Study of Section Enlargement with Reinforced Concrete to Increase Shear Capacity for Damaged Reinforced Concrete Beams. Applied Mechanics and Materials Vols. 256-259 (2013) pp 1148-1153.

7) Duarte, P., Correia, J.R., Ferreira, J.G., Nunes, F. and Arruda, M.R.T. Experimental and numerical study on the effect of repairing reinforced concrete cracked beams strengthened with carbon fibre reinforced polymer laminates. Can. J. Civ. Eng. Vol. 41, 2014

8) Fayyadh, M. M., & Razak, H. A. Analytical And Experimental Study On Repair Effectiveness Of Cfrp Sheets For Rc Beams. Journal Of Civil Engineering And Management, 2013, 20(1), 21–31. doi10.384613923730.2013.799095.
9) Gunarani GI, Saravanaku P. Experimental Studies on RC Beams Strengthened with Epoxy and Polymer Grouting. Asian Journal of Applied Sciences [Internet]. Science Alert; 2014 Feb 1;7(2):88–95.
10) Morsy, AM, El-Tony, E-TM and El-Naggar ,M. Flexural repair/strengthening of pre-damaged R.C. beams using embedded CFRP rods. Alexandria Engineering Journal [Internet]. Elsevier BV; 2015 Dec;54(4):1175–9.
11A., Ahmed et al. "Repair Effectiveness of Damaged RC Beams with Web Opening Using CFRP and Steel Plates." Jordan Journal of Civil Engineering 10.2 (2016): 163–183. Crossref. Web.
12) Boumaaza, M., Bezazi, A., Bouchelaghem, H., Benzennache, N., and Amziane, S. Behavior of pre-cracked deep beams with composite materials repairs. Structural Engineering and Mechanics, Techno-pressLtd,2017,63(5),pp.575-583.
13) bdulrahman, Mazin B., and Husham M. Rashid. "Repairing of Reactive Powder Concrete T-Beams Containing Web Opening by CFRP Strips." Tikrit Journal of Engineering Sciences 26, no. 1 (March 1, 2019): 9–19. doi:10.25130/tjes.26.1.02.
14) Chalioris, C. et al., 2019. Repair of Heavily Damaged RC Beams Failing in Shear Using U-Shaped Mortar Jackets. Buildings, 9(6), p.146. Available at: http://dx.doi.org/10.3390/buildings9060146.
15) Salahaldin, A.R., Jomaa'h, M.M., Oukaili, N.N., Ghaidan, D.J. Rehabilitation of Hybrid RC-I Beams with Openings Using CFRP Sheets Civil Engineering Journal. Vol. 8, No. 01, January, 2022.