第 48 卷第 12 期
2021 年 12 月

湖南大学学报（自然科学版）
Journal of Hunan University（Natural Sciences）

Vol. 48. No. 12.
December 2021

Open Access Article

RESEARCH OF SEPARATION OF INDUSTRIAL FIBER FROM COTTON WASTE

Obidov Avazbek Azamatovich
Professor, Department of Technological Machines and Equipment, Namangan Institute of Engineering and Technology, Namangan, Uzbekistan, E-mail: obidovavazbek66@gmail.com

Sultonov Mirzaolim Mirzarahmatovich
Teacher, Department of Technological Machines and Equipment, Namangan Institute of Engineering and Technology, Namangan, Uzbekistan, E-mail: msultonov86@gmail.com

Khamidov Sardor Dilmurod o'g'li
Doctoral student, Department of Technological Machines and Equipment, Namangan Institute of Engineering and Technology, Namangan, Uzbekistan, E-mail: hamidovsardor.de@gmail.com

Begmatov Ohunjon Sodiqjon o'g'li
Master student, Department of Technological Machines and Equipment, Namangan Institute of Engineering and Technology, Namangan, Uzbekistan, E-mail: ohunbeg@mail.ru

Abstract: In this article analyzed about the new technology developed for the separation of spinning fibers from fibrous waste goods and based on its effective operation based on experiments. In order to conduct experiments in production, based on the results of theoretical research, the diameter of the receiving drum was 320 mm, the diameter of the main drum with metal saw tape was 560 mm, the diameter of the brush drum was 230 mm and the electric motor power was 4.1 kW. In this experiment, the main drum rotation speed was 400 rpm, the receiving drum speed was 330 rpm and the brush drum speed was 1350 rpm. Based on the results of the study, the effective operation of the new device was confirmed.

Keywords. Cotton fiber, fibrous waste, lint, lint, short fiber, long fibers, solid metal saw tape, cotton seed, gin, fine impurities, quality, drum, rotation speed, angle of inclination.

摘要：本文在实验的基础上，分析了纺丝纤维与废品中分离纺纱新技术的有效运行情况。 为了在生产中进行实验，根据理论研究结果，接收滚筒直径为**320mm**，**金属**锯带主滚筒直径为**560mm**，**毛刷**滚筒直径为**230mm**， 电动机功率为 **4.1 kW**。 **本**实验中，主滚筒转速为**400 rpm**，**接收**滚筒转速为**330 rpm**，**毛刷**滚筒转速为**1350 rpm**。 **根据研究**结果，确认了新设备的有效运行。

Received: October 05, 2021 / Revised: October 31, 2021 / Accepted: November 30, 2021 / Published: December 31, 2021

About the authors：Obidov Avazbek Azamatovich

Corresponding author- *Email:

关键词。 棉纤维、纤维废料、皮棉、皮棉、短纤维、长纤维、实心金属锯带、棉籽、杜松子酒、细杂质、质量、滚筒、转速、倾角。

INTRODUCTION. In spite of many researchs have been done to improve the process of fiber separation from waste, some aspects of this process have not been fully disclosed, in particular, the development of fiber separation technology - short fiber and lint-free fiber, the working bodies and factors influencing the separation of fiber from waste. The problem of setting the optimal values of the parameters has not been fully resolved. In addition, the possibility of determining the optimal parameters of monolithic sawdust tape drums during the separation of long fibers from lint and short fiber content, as well as the possibility of directing the fibrous mass to the drums has not been sufficiently studied. Based on the above, a more in-depth study of the possibility of introducing technologies to increase fiber production in the enterprise, the development of the design of fiber separation devices from waste, which do not adversely affect product quality, is relevant today [1,2].

After the ginning process at the ginning plant, the cotton fibers are cleaned of various contaminants and sent for pressing. Demon seeds are sent to processes such as lintering, delintering, and from them fibrous products such as lint and short fiber are produced. Lintering and delintering of cotton seeds, i.e. the separation of fiber and short fiber remaining after seed germination, is extremely important as the main process. As a result of the primary processing of seed cotton in ginneries, fiber, short fiber, seed and technical seed, wool and short fiber products are obtained [3,4].

The industrial grade of cotton fiber is determined by the indicators of tensile strength, degree of maturity, defects and contamination, moisture content (as a percentage of dry weight). The tensile strength and degree of maturity are the most important criteria in determining the industrial grade of cotton fiber. The indicators characterizing the varieties of cotton fiber according to the state standard are given in Table 1.

During the processing of cotton seeds, its complete hair coverage and residual fiber (after fiber separation) are analyzed. The less hair the cotton seed is covered with, the more efficient it will be in the production of oil and in its use for planting.

Table 1

Indicators characterizing the type of cotton fiber

Indicators	Norms by varieties						
	High	I	II	III	IV	V	VI
Breaking force	4.6 and more	4.8-4.4	4.3-3.4	3.8-3.4	3.3-3.0	3.9-2.5	Less than 2.5
Maturity coefficient	2.1	2	1.8	1.6	1.4	1.2	Not less than

							1.2
Defects and pollution total, in%	1.9	2.1	2.6	3.5	5.3	8.6	12.8
Moisture relative to dry fiber weight, in% (for all cotton-growing districts)	8	8	9	10	11	12	12

The amount of short fiber that can be separated from the cotton seed in a gin machine varies considerably. It also depends in part on the seed and industrial varieties of cotton as well as the growing conditions. In the research of scientists of JSC "Pakhtasanoat Ilmiy Markazi" for different seed varieties of cotton, after separation from the fiber in the gin machine, the average calculation criteria for full coverage of the seed is set (Table 2).

Residual fiber content of a seed is the weight of individual fibers of more than 6 mm in length that adheres to the seed after manual separation of the fibers from 200 cotton seeds.

This size is compared with the standards that determine the degree of purification (whether it is partially cleaned or over-scraped) and the correctness of the fiber separation process. Incomplete cleaning of the seed, ie an increase in the amount of residual fiber, leads to the retention of pure spun fiber, which reduces the yield of fiber from seed cotton. Excessive scraping of the seed also reduces its staple length due to an increase in the amount of lint [5-7].

Table 2

Calculation norms of seed hair cover after fiber separation

Seed variety of cotton	Complete hair coverage of the seed, in%		The average percentage of full hair coverage
	Varieties I- II	III- IV varieties	
Medium fiber varieties			
Namangan-77	12.7	14.0	13.0
S-6524	12.5	14.0	12.8
137-F	12.7	14.0	13.0
138-F	14.0	15.5	14.3
S-1472	11.5	13.0	11.8
Fine-grained varieties			
2I3	2.5	3.5	2.7
5476-I	2.5	3.5	2.7
504-V	4.5	5.0	4.6
5904-I	3.0	4.0	3.2

Complete hair coverage of the seed is the amount of weight expressed as a percentage of the original residue of the broken seed for analysis after the fiber or short fiber and fine hairs have been separated from the seed cotton.

METHOD. In the main technological processes in the cotton ginning industry, no matter how perfect it is, various fibrous wastes are formed, which are practically impossible to eliminate. When considering the possibility of reducing the amount of waste, it became clear that this situation is related to the nature of the process. These cases occur due to the requirements of fiber separation from seed, its purification, lintering, delinterization, production of high-yield products and so on.

In the production of textile products from cotton fiber, a certain part of the raw materials delivered to the enterprise is wasted in various technological processes. This situation occurs not only in ginneries, but also in textile and light industry enterprises.

The release of fiber waste from fiber separation and lintering processes, air purification chambers, and fiber cleaning machines at the ginning plant has been confirmed in many studies. In these studies, fibrous waste has been recommended as a raw material for spinning, sewing, cotton production and non-woven fabrics through recycling. It is known that according to the State Standard [8,9], fibrous wastes of ginneries are divided into three types depending on their quality: short fiber, regenerated (separated) fiber, cotton wool.

Short fiber is a product that comes from the process of seed separation, sorting and sorting, which is introduced before the process of fiber separation, cleaning, lintering, and has a fiber with a certain impurity. The composition of short fiber can vary, including diseased, weak seeds, fibers adhering to seeds, fibers not adhering to seeds, various small and large contaminants, plant fragments.

The distance between the columns of the fiber separation machine (jinn) is suitable for standard students, and it is possible to adjust the amount of short fiber output through a short fiber coaster. In addition, the output of short fiber also depends on the navigation of the raw cotton. In the technological process in the processing of raw materials of 1st and 2nd grade, depending on the weight, 0.22-0.35%, and in the processing of 3rd and 4th grade cotton 0.45-0.65%, and in some cases up to 1.6%. short fibers may separate. When the distance between the columns of the fiber separation device is greater than the set value, a larger seed is added to the waste. Seed cotton should be divided into 2 types of short fiber depending on the navigation, fiber content, dirt, moisture and color, and meet the requirements given in Table 3.

Table 3

Properties of short fiber products separated from cotton

№	**Name of indicators**	**Types**	
		1	**2**
1	Short fiber color	White to light yellow	Yellow
2	Fiber, %	45-55	
3	Dirt, %	15-Dec	

4	Humidity, %	12-Oct
5	Undeveloped seeds	The norm is not set

Table 4

Properties of regenerated fibers

№	Property name	Variety	
		1	2
1	The tensile strength of the fiber, N	0.041	0.032
2	Defective and contaminant content,%	11-12	22-23
3	Moisture content,%	9.5	11.5

Type 1 and type 2 short fibers are processed in the short fiber regenerator to produce regenerated fibers. These regenerated fibers contain a large amount of various defective and dirty compounds. In addition, the length of the fiber staple is not the same, it is observed that the length of the short fibers is 3-7 mm smaller than the fibers in it. The classification of fibers by regeneration and the requirements for other properties are given in Table 4.

At the ginnery, OVM type cleaners are available in OVM-1 and OVM-2 brands [10-12]. While the OVM-1 machine cleans wool and lint products, the OVM-2 machine is used to clean short fiber products from contaminants. The cleaners of both brands differ in the parameters of the main drums, the values of the mesh surfaces and the distances between the drums.

The company has an OVM cleaner (Fig. 1), depending on the type 1 or 2, with 1 pins, or a drum with a saw, 2 mesh surface, 3 screw compactors, 4 bodies, 5 screw devices for the removal of various properties found

The cleaning process of these cleaners: fibrous waste is dragged on the surface of the net under the influence of screw piles (beaters) of rotating drums, crushed, and the impurities and dust in it are separated through the cracks in the surface of the net. The separated contaminants are discharged out of the machine through the auger device. The cleaned portion of the fibrous waste is fed into a screw compactor, where it is compacted and sent to a press machine.

Figure 1 shows a drum of an OVM-1 type cleaning machine.

Table 5

Description of OVM type waste treatment machines

Cleaning brands	Grid surface parameter	Drum structure	Mesh surface and drum distance, mm
OVM – 1	The diameter of the hole is from 1.5 mm	It has stakes	3.5-7
OVM - 2	The hole is 3x25 mm, made of wire	Loosening	20-22
	The hole is 8x8 mm, made of wire	Loosening	19-23

To date, ROV brand equipment has been used in enterprises to regenerate (spinning) fiber from fibrous waste (short fiber) that can be used in textile enterprises. This device has been used in the waste treatment department of the ginnery as part of OVM type cleaners. This technology has been used for continuous cleaning of fiber waste from fiber separation (ginning) and treatment units and separation of normal fibers. The main working bodies of the ROV-type regenerator are shown in Figure 2, which consist of: waste treatment, mesh surface drum and regeneration sections, as well as a supply-adjuster, body and drive cabinet.

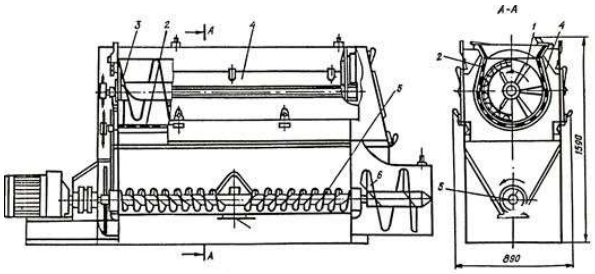

Figure 1. OVM-1 type cleaning machine

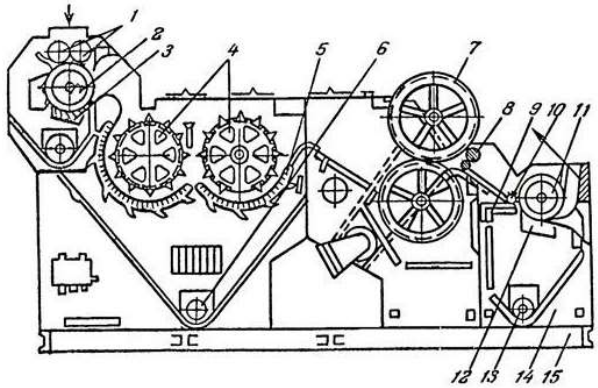

Figure 2. ROV type fiber waste regeneration machine

In the cleaning section of the regenerator, the device is supplied with waste and cleaned of contaminants. This section consists of 1-row supply rollers, 2-saw drum, 3-column grate, 4-pile drums, 5-single-column grate and 6-screw augers for removal of contaminants. The mesh surface drum section is used to separate the cleaned waste from the air stream and to transfer it in a canvas mode by uniformly adjusting the thickness and width. This section consists of a 7-gauge surface drum and an 8-gauge roller that carries the finished canvas.

The task of the device regeneration unit is to separate the normal fiber from the short fiber and to clean the fiber again. This section consists of 9 supply tables, 10 supply rollers, 11 saw drums, 12 grate grate and 13 saw blades. The supply-adjustment section to the right of the regenerator monitors the performance of the device. This unit is equipped with a pulse breaker, lever system and manual vibration devices, which are located on the side of the body of the 14th device. The body is attached to the 15th frame.

In this fibrous waste regeneration device, the separation of the fiber that can be spun from the waste is carried out in the following case: The brushes in front of the drum serve to make the waste stick more tightly to the drum tooth. The waste attached to the saw drum hits a 3-column grate. As a result of this collision occurring several times, the contaminants contained in the waste, unripe seeds and foreign defective mixtures pass through the grate and fall into the conveyor 6-impurities.

The normal fiber mixture cleaned in the device is taken from the saw drum by centrifugal force and moved towards the drum with piles. Drums with piles are passed through a grate grate and re-cleaned. Foreign contaminants separated from the mass pass through the grate and pass to the

conveyor for dirty mixtures. In the device, the clean fibers are sent to the mesh surface drums section. The air used in the device directs these fibers evenly to the mesh surface drums. The slotted rollers take the fibrous layers from the surface of the mesh surface drums and direct them across the tray to the supplier. As the axis of the supply rollers is compressed on all sides, the fiber supply is compressed on the table. The compressed fiber layer is directed to the drums with saws. The layer of fiber from the bottom of the drum is combed, removed and cleaned again with the help of a grate. The fiber separates from the drum by centrifugal force and enters the condenser using a pneumatic current. Fiber waste from the gin is divided into 3 types: short-fiber, fluffy and fluffy. Short-fiber waste is a mass produced during ginning, seed cleaning and fiber regeneration. Its appearance is determined by comparison with a sample taken from the waste. Short fluff waste is a mass captured by a condenser for fluff and an air purification system using a cyclone.

Experience has shown that in ginneries, an effective device that allows to separate long fibers from lint or short fiber from technological processes has not yet been developed in practice. Therefore, based on the results of theoretical research, it will be necessary to create an experimental design of a new device and conduct experiments.

THE MAIN ISSUE. On the basis of a comprehensive analysis of the prospects for the improvement of technological processes, the recognized directions of the use of fibrous waste in textiles are identified [13,14]. In practice, not all of these areas have been introduced into production. Some of them have no scientific basis.

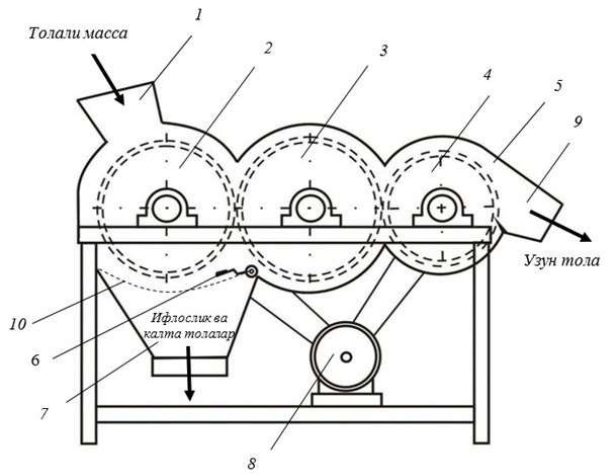

Figure 3. Schematic diagram of a spinning cotton fiber separation device

In determining the direction of waste use, of course, it is important to have a technological and economic justification for the production of more valuable and high-quality products, as well as less expensive. Although technological process wastes contain fibers suitable for spinning, the economic efficiency of spinning yarn from them is insignificant. Therefore, methods such as cleaning such wastes from special fibers in special methods or adding them to wastes that are really suitable for spinning, using them as raw materials for non-woven fabrics or for the production of cotton, are more effective.

In order to solve this task, the goal was to create a device for the separation of fibers from waste from technological processes.

As a result, the amount of fiber output in the enterprise will increase and the quality of lint will improve. The purpose of offering the device is to increase the amount of fiber output in the enterprise by separating the long fibers that are added to the waste (short fiber), as well as to prevent the addition of long fibers to the lint by processing lint, and improve lint quality.

The proposed device consists of the following main elements: 1 inlet pipe, 2-saw receiving drum, 3-main drum with metal serrated tape, 4-brush drum for stripping long fibers, 5-kojuh, 6-router for long fibers, 7-short mine for fiber, 8-motor, 9-mine for long fiber and 10-mesh surface (Fig. 3).

This device works as follows: the fiber mass from the technological process comes to the saw receiving drum 2 through the inlet pipe 1, where the fiber mass is attached to the drum for grinding and the grinding process begins and it is further grinded using side-mounted drills (not shown). The crushed fiber mass is then passed through the mesh surface 10 to the main drum 3 with metal serrated tape and the long fibers in the mass are carried by the inclined teeth of the main drum. The remaining short fibers and other contaminants in the receiving drum 2 come down and are discharged out of mine 7 for the short fibers.

In order to increase the accuracy of hanging long fibers, a guide 6 is mounted on the lower wall of the main drum 3 with metal serrated tape, by means of which long fibers are routed to the main drum.

The long fibers attached to the main drum 3 are removed in the next process through the brush drum 4 and out for the long fibers through the shaft 9.

An experimental version of this device was prepared and initial tests were conducted to determine the possibility of efficient separation of fibers that can be used in industry.

Among the properties that characterize the length of a fiber, its uniform distribution along its length is of great technological importance. Therefore, the experiments were repeated several times.

The second and most important aspect of the issue is to determine the feasibility of using these fibers in industry. Therefore, work was carried out to determine the technological significance of fiber.

The fiber separator is wrapped around a headset consisting of a receiving drum saw, which is the main working body, and a separating drum with a solid metal saw tape. In addition, the device frame consists of a steel profile for 40x80 mm, the diameter of the receiving drum is 320 mm, the diameter of the main drum with metal serrated tape is 560 mm, and the diameter of the brush drum is 230 mm. The electric motor power is 4.1 kW.

Experimental studies were conducted on cotton fiber grown in the region, in conditions close to production. Taking into account the size of the fiber mass coming from the liner, the inlet pipe was taken as 500x200x3. The supply was done manually. Indicators were determined before and after the experiment.

During the experiments, it is necessary to select the parameters that allow maximum separation of long fibers in lint and short fiber content. To do this, it is necessary to take into account factors such as the geometric parameters of the saw set, drum rotation speed of the saw and metal serrated tape, the distance between the brush drum and the drum with metal serrated tape, the angle of inclination of the guide. These factors have been identified on the basis of theoretical and practical research conducted in previous chapters, and their applicability is based on experimental studies conducted under production conditions. During the experiment, 2 sets of D40-30-30 and D37-30-40 (Doffer wires) for the separating drum were installed and tested. In each test, the

amount of long fibers that were separated and that went out with the short fiber was measured.

RESULTS ANALYSIS. Testing of the new device in production conditions was carried out in accordance with the existing regulations, S - 6524 and Namangan - 77 industrial varieties, first and second grade, 6-12% humidity, 1.9-4.8% pollution, seed fluff 7-12% were carried out in sizes. This device is installed in the pressing shop of the enterprise after the short fiber condenser, and the condenser discharges the fiber waste into the device. Sampling after the device was performed according to the existing method [15, 16].

Table 6 shows the results of initial experiments with the new device. The experiments were performed according to the device parameters identified in the theoretical studies.

Table 6

Influence of separating drum rotation speed and headset type on fiber separation efficiency

№	Separating drum rotation speed, rpm	Distance between separator and brush drums, mm	Amount of separation of long fibers (by short fiber),%		The amount of long fibers in lint,%	
			D40-30-30	D37-30-40	D40-30-30	D37-30-40
1	250	1	65	59	49	47
2		1.5	65	59	47	47
3		2	62	55	44	46
1	300	1	69	60	55	48
2		1.5	69	58	58	49
3		2	65	63	59	51
1	400	1	73	69	65	52
2		1.5	72	61	64	55
3		2	70	65	60	55
1	450	1	68	65	55	51
2		1.5	65	64	54	52
3		2	62	62	51	49
1	500	1	64	62	51	49
2		1.5	64	64	54	50
3		2	62	52	55	50

We take the key moments from this table and plot them using a special program. In addition, the table shows that the D40-30-30 headset used for separation is more efficient. Therefore, it was recommended to take these parameters into account when conducting further research.

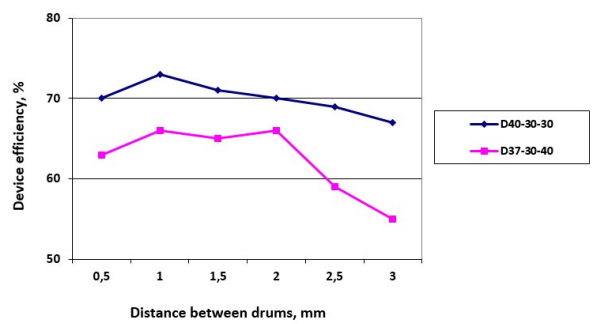

Figure 4. The dependence of the device efficiency on the distance between the main drum and the brush drum with metal serrated tape

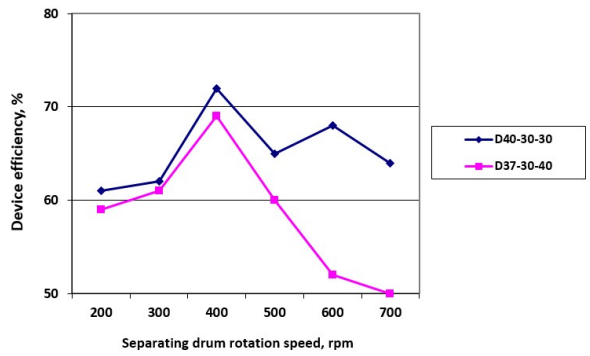

Figure 5. Dependence of head drum rotation speed with metal serrated tape on device efficiency

Conclusion. The results of the above experiments show that the values of the parameters determined in the theoretical studies were also confirmed in the experimental studies. In particular, the overall efficiency was 71-72% when the rotational speed of the main separator metal serrated tape drum was nab = 400 rpm, the angle of inclination of the guide was 100, and the distance between the main drum and brush with metal serrated tape was 1 mm. This situation is also seen in the graphics built into the computer program (Figures 4, 5).

In theoretical studies, if the values are set to the production copy, the operating productivity of the device at the rotational speeds of the drums in Table 6 is 300 (short fiber) - 500 (lint) kg / h, which is sufficient to implement the device in production conditions. That is, when the device operates at this capacity, it will be possible to process any fibrous mass produced at the enterprise.

REFERENCES

1. A Obidov, K Akhmedhodjaev, O Sarimsakov, Q Holikov. Investigation of the Properties of Fibrous Cotton Seeds, for Sorting on a Mesh Surface. Engineering, Vol.10 No.09(2018), 572-578 P.

2. Obidov Avazbek, Sultonov Mirzaolim, Muhksinov Ibrohim, Abdullaev Shokir. The Theoretical Studies of the Cultivation of Three Cotton Seeds along the Plain. Engineering Vol.10 No.08(2018), 514-520 P.

3. A.A.Obidov M.M.Sultanov. To research the method of separating fibers suitable for spinning on a needle drum. International scientific and practical conference CUTTING EDGE-SCIENCE. June 29-30, 2020 Shawnee, USA, 128-131 P.

4. Sultonov M.M. Obidov A.A. STUDY OF FIBER MOTION IN A NEEDLE DRUM FIBER SEPARATION DEVICE. UNIVERSUM: TECHNICAL SCIENCE, 5-74, 33-37 P.

5. Mirzaolim Sultanov, Avazbek Obidov. INVESTIGATION OF WORKING PARTS OF FIXED DEVICE DESIGNED TO SEPARATE SPINNING FIBERS FROM FIBROUS WASTE THAT CAN BE SPUN. Journal of Critical Reviews, JCR. 2020; 7(4): 2314-2322, doi: 10.31838/jcr.07.04.362, 5614-5623 P.

6. Avazbek Azamatovich Obidov and Mirzaolim Mirzarakhmatovich Sultanov. Study of Technological Parameters of Fiber Separation Device. International Journal of Psychosocial Rehabilitation. 2020, Volume 24 - Issue 5, 6400-6407 P.

7. Boboyev Utkirbek Obidov Avazbek Azamatovich, Matkarimov Kamoliddin Juraboyevich, Sultonov Mirzaolim Mirzarahmatovich. Research Capacity of the Fiber of Long Fiber Separating Drums from Waste Fibers Composition, International Journal

of Innovative Studies in Sciences and Engineering Technology (IJISSET), Volume: 5 Issue: 3 | 2019, 28-31 P.

8. Avazbek Obidov, Orif Mamatqulov, Mirzaolim Sultanov. Theoretical Analysis of the Movement of Cotton Piece on the Slope Surface, International Conference «Science and practice: a new level of integration in the modern world». Conference Proceedings. Berlin-Warsawa, 2018, 82, 151-156 P.

9. Khamit Axmedxodjayev, Akmal Umarov, Kamola Ortiqova. Investigation of the Ginning Process on ДП Series Saw Gin Stands, Engineering Vol.11 No.08(2019), Article ID:94702,8 pages.

10. Jamoliddin Ergashev, Juramirza Kayumov, Nizom Ismatullaev, Umidjon Parpiev. Theoretical Basis for Calculating the Determination of the Optimal Angle of Rotation of the Slit and Air Velocity. International Journal of Advanced Science and Technology Vol. 29, No. 03, (2020), pp. 12776 – 12784.

11. Obidov A.A. Investigation of the working surface of a new seeding machine // Journal of Textile Problems. - Tashkent: TITLI, 2006. - №2. - 29-32 p.

12. Avazbek Obidov, Muhiddin Vokhidov, Jahongir Abdurahmonov. Exploring the Efficiency of Experimental Construction of Sorting Ginned Cotton Seed Machine. Engineering, Scientific Research Publishing. Vol.13 No.1, January 2021.

13. Obidov A.A. Improvement of the technology of cleaning and sorting of ginned seeds. Dissertation of Candidate of Technical Sciences. - Tashkent: TITLI, 2007. - 200 p.

14. Aliev B.T. Improvement of spinning fiber separation device in cotton waste. PhD dissertation, Namangan, 2020, 120 p.

15. Obidov A.A., Mamatqulov O.T., Sultonov M.M. Research to increase the rate of fiber production in the ginnery. Monograph, Namangan, 2020, 125 p.

16. Mukhitdinov A.M., Makhkamov R.G. The load on the teeth of the comb drum set of the rotary spinning machine. Dep. Article, Namangan 1989.